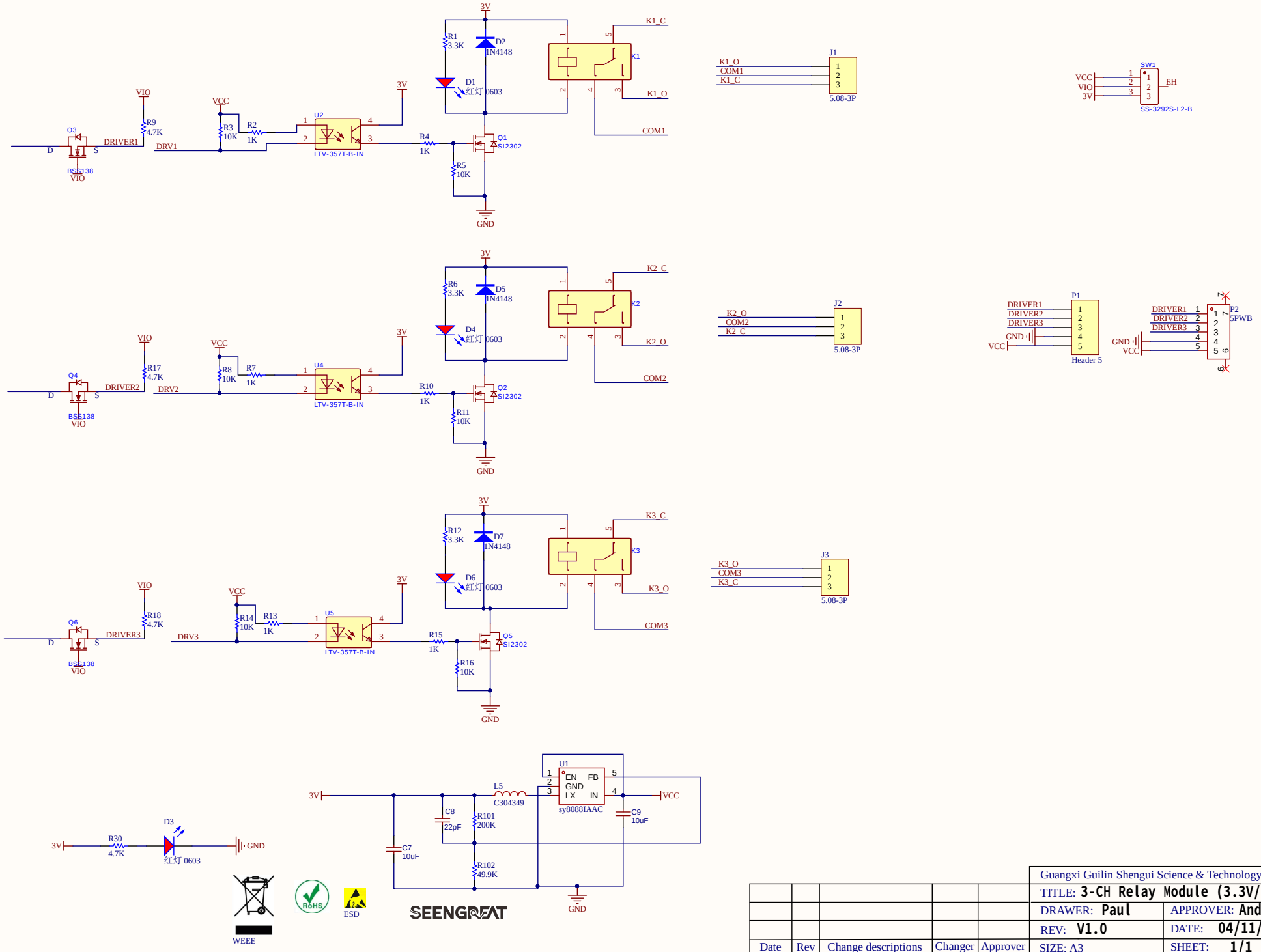

					Guangxi Guilin Shengui Science & Technology Co., Ltd
					TITLE: 3-CH Relay Module (3.3V/5V IO)
					DRAWER: Paul / APPROVER: Andy Li
					REV: V1.0 / DATE: 04/11/2026
Date	Rev	Change descriptions	Changer	Approver	SIZE: A3 / SHEET: 1/1